AMC MECANOCAUCHO

Inspired Noise UK Ltd
Acoustic Insulation and Anti-vibration Products

FLOATING FLOOR MOUNTS
FZH + Sylomer®

DESCRIPTION

The goal of the system is to avoid the structure borne noise installing elastical mounts that are embedded in the concrete floating floor .The process of elevation is done once the concrete is dry.

The AMC-MECANOCAUCHO type FZH mounts incorporate a polyurethane elastomer called Sylomer®. This material offers optimal elastic and mechanical properties for the application.

The AMC-MECANOCAUCHO type FZH mounts can be manufactured in different densities of Sylomer to match the natural frequency needed on the application.

The process of leveling is simple and effective. The density of mount per m2 is 1.12 and the distance between the mounts is 0.9m.

INSTALLATION

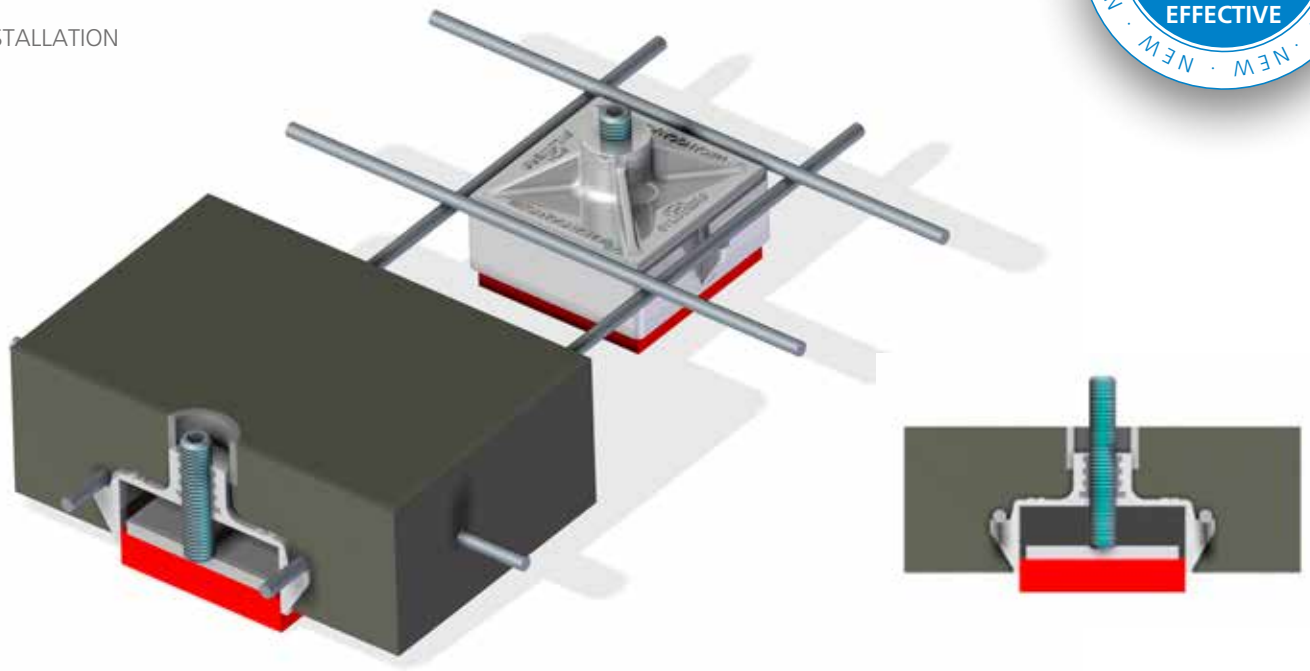

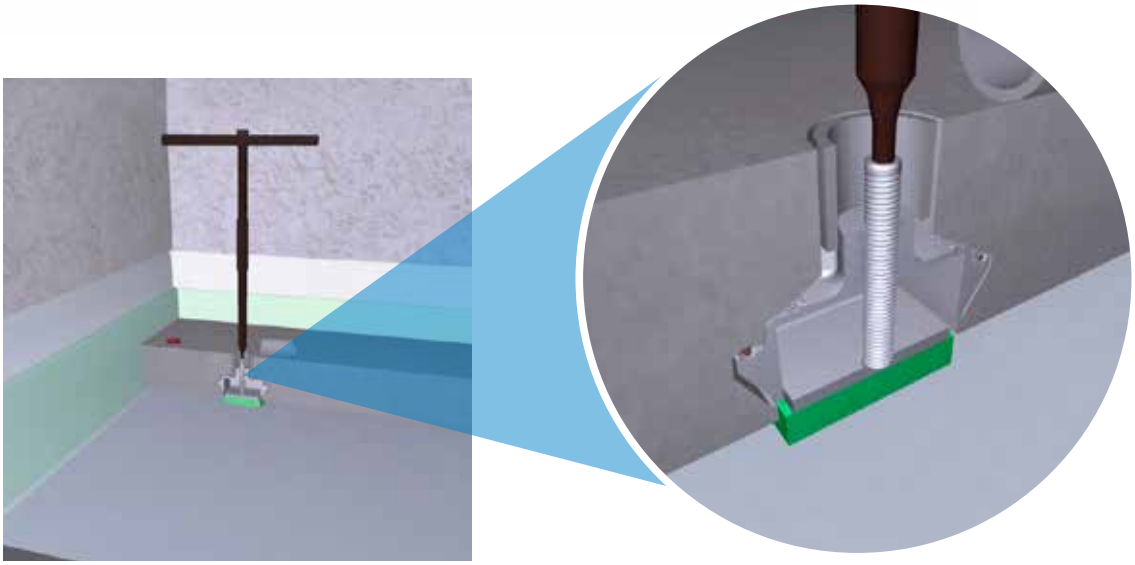

AKUSTIK + sylomer® by getzner

FLOATING FLOOR MOUNTS

FZH + Sylomer®: Range

Type		SUMMARY	MAX. LOAD (Kg)	Freq (Hz) Max Load	CODE
	FZH-33-25	Concrete embedded Jack up mounts, designed for the antivibration suspension of slabs.	140	11	176511
	FZH-33-37	Concrete embedded Jack up mounts, designed for the antivibration suspension of slabs.	140	8,6	176512
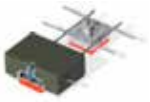	FZH-39-25	Concrete embedded Jack up mounts, designed for the antivibration suspension of slabs.	240	11,1	176513
	FZH-39-37	Concrete embedded Jack up mounts, designed for the antivibration suspension of slabs.	240	8,5	176514
	FZH-45-25	Concrete embedded Jack up mounts, designed for the antivibration suspension of slabs.	490	10,4	176515
	FZH-45-37	Concrete embedded Jack up mounts, designed for the antivibration suspension of slabs.	490	8,1	176516
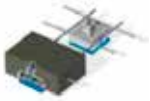	FZH-51-25	Concrete embedded Jack up mounts, designed for the antivibration suspension of slabs.	800	11,8	176517
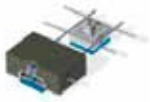	FZH-51-37	Concrete embedded Jack up mounts, designed for the antivibration suspension of slabs.	800	9,1	176518
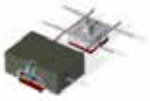	FZH-57-25	Concrete embedded Jack up mounts, designed for the antivibration suspension of slabs.	1000	11,5	176519
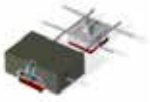	FZH-57-37	Concrete embedded Jack up mounts, designed for the antivibration suspension of slabs.	1000	8,2	176520

ADVANTAGES:

- **Lower height of the screed.** Optimum acoustic efficiency without high concrete thickness.
- This floor mount is specially interesting for those rooms who have limited space and can not use a conventional floor mount that increases the height of the floor.
- **Good isolation,** thanks to the antivibration properties of the Sylomer®. Low frequencies can be achieved providing an optimum isolation.
- **Quick installation,** no need to use plywood boards or joints between them.
- **Cost effective,** no need to use plywood boards nor joints.
- **Safe,** acoustic bridges are avoided when levelling the concrete floor.
- **Simple installation,** no specialist installators are needed.
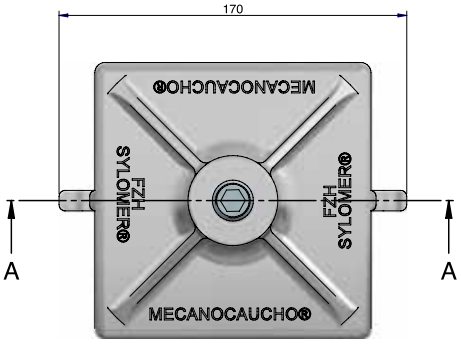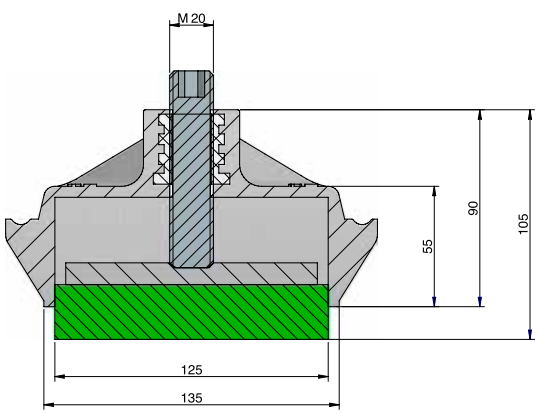
CHARACTERISTICS